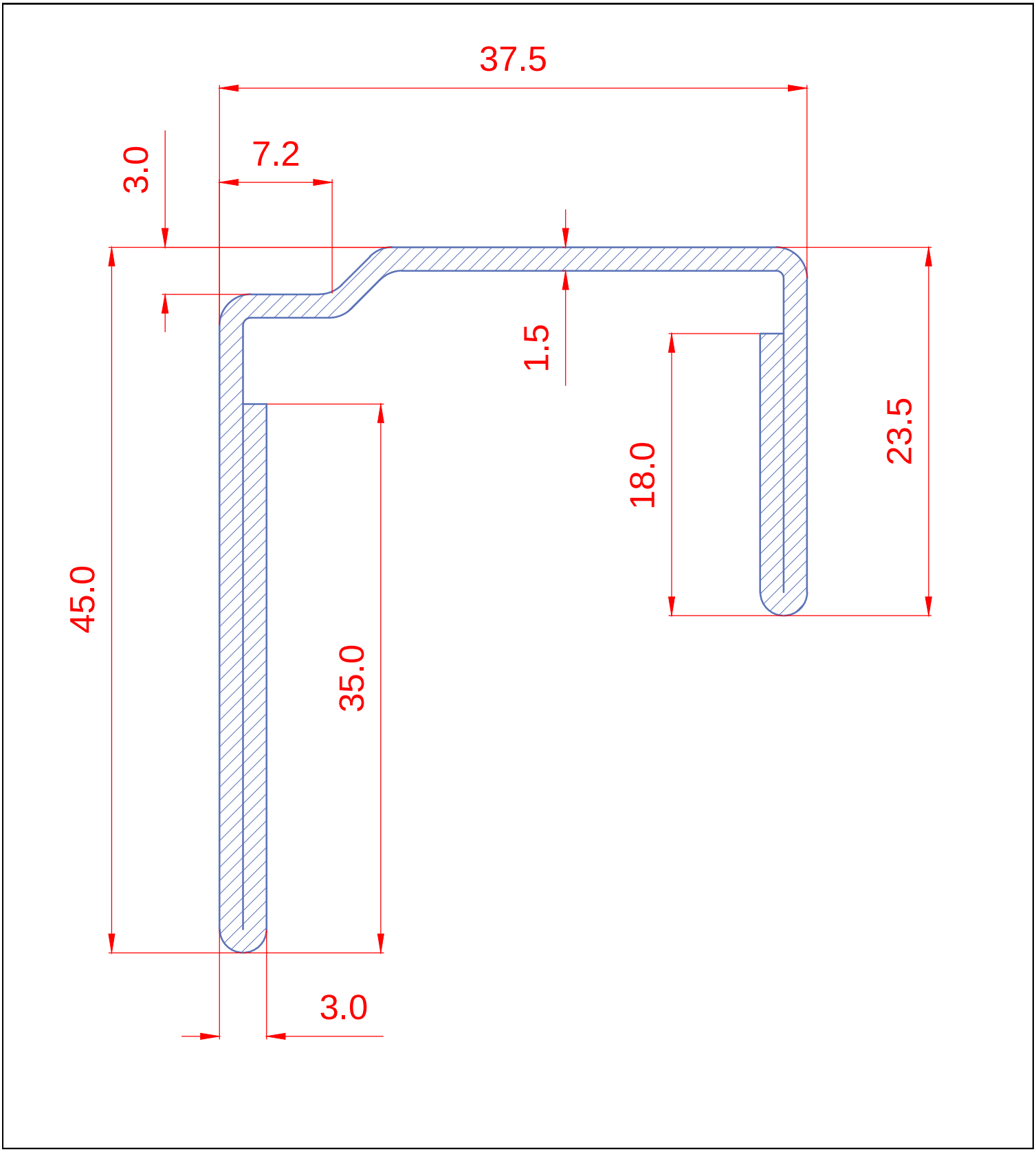
37.5
7.2
3.0
1.5
18.0
23.5
45.0
35.0
3.0